SINGLE BARREL SHOTGUN

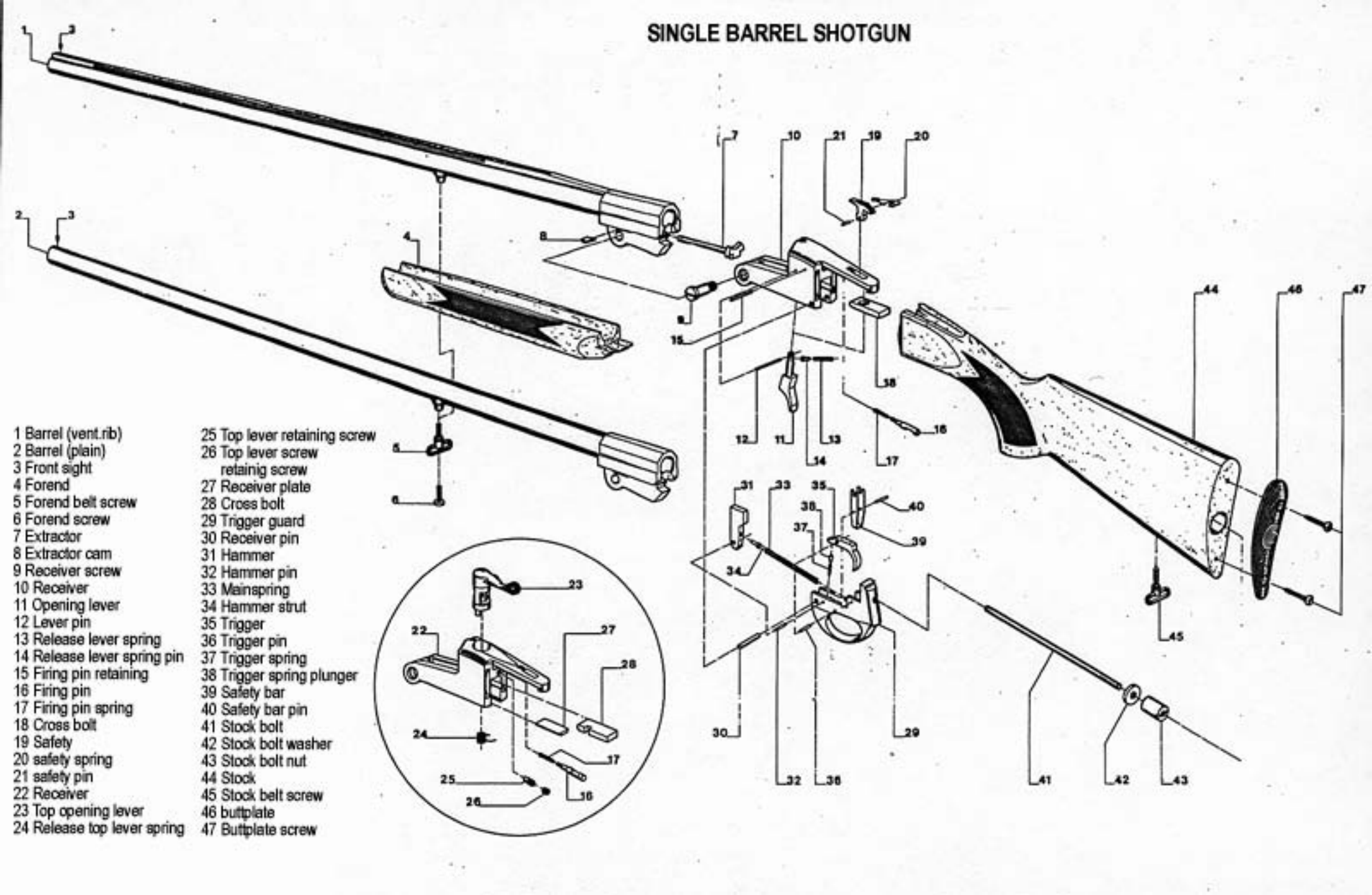

1 Barrel (vent.rib)
2 Barrel (plain)
3 Front sight
4 Forend
5 Forend belt screw
6 Forend screw
7 Extractor
8 Extractor cam
9 Receiver screw
10 Receiver
11 Opening lever
12 Lever pin
13 Release lever spring
14 Release lever spring pin
15 Firing pin retaining
16 Firing pin
17 Firing pin spring
18 Cross bolt
19 Safety
20 safety spring
21 safety pin
22 Receiver
23 Top opening lever
24 Release top lever spring
25 Top lever retaining screw
26 Top lever screw retainig screw
27 Receiver plate
28 Cross bolt
29 Trigger guard
30 Receiver pin
31 Hammer
32 Hammer pin
33 Mainspring
34 Hammer strut
35 Trigger
36 Trigger pin
37 Trigger spring
38 Trigger spring plunger
39 Safety bar
40 Safety bar pin
41 Stock bolt
42 Stock bolt washer
43 Stock bolt nut
44 Stock
45 Stock belt screw
46 buttplate
47 Buttplate screw